TYPE	OUTPUT		POLE	TIME RATING	VOLTAGE V	Hz	SYN.SPEED R.P.M
	HP.	kW.					
AEHAGD	100	74.6	6	CONT.	2300/4000	60	1200

TOTALLY ENCLOSED FAN-COOLED TYPE. SQUIRREL-CAGE ROTOR

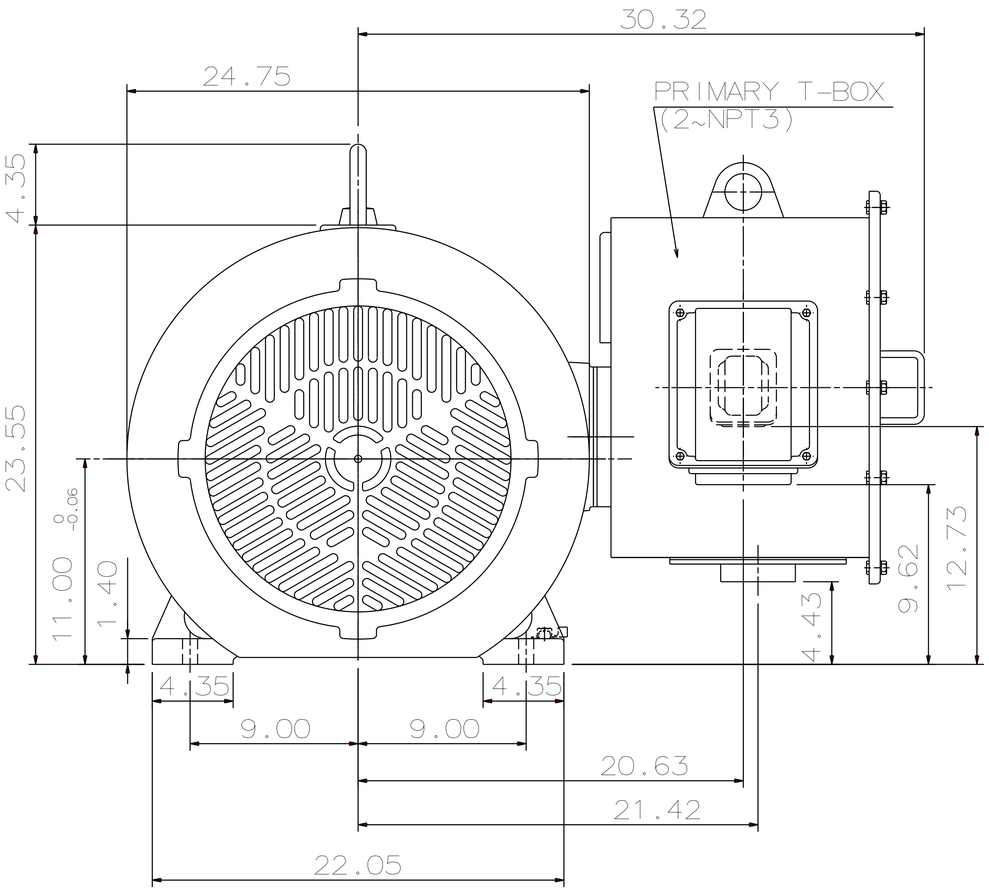

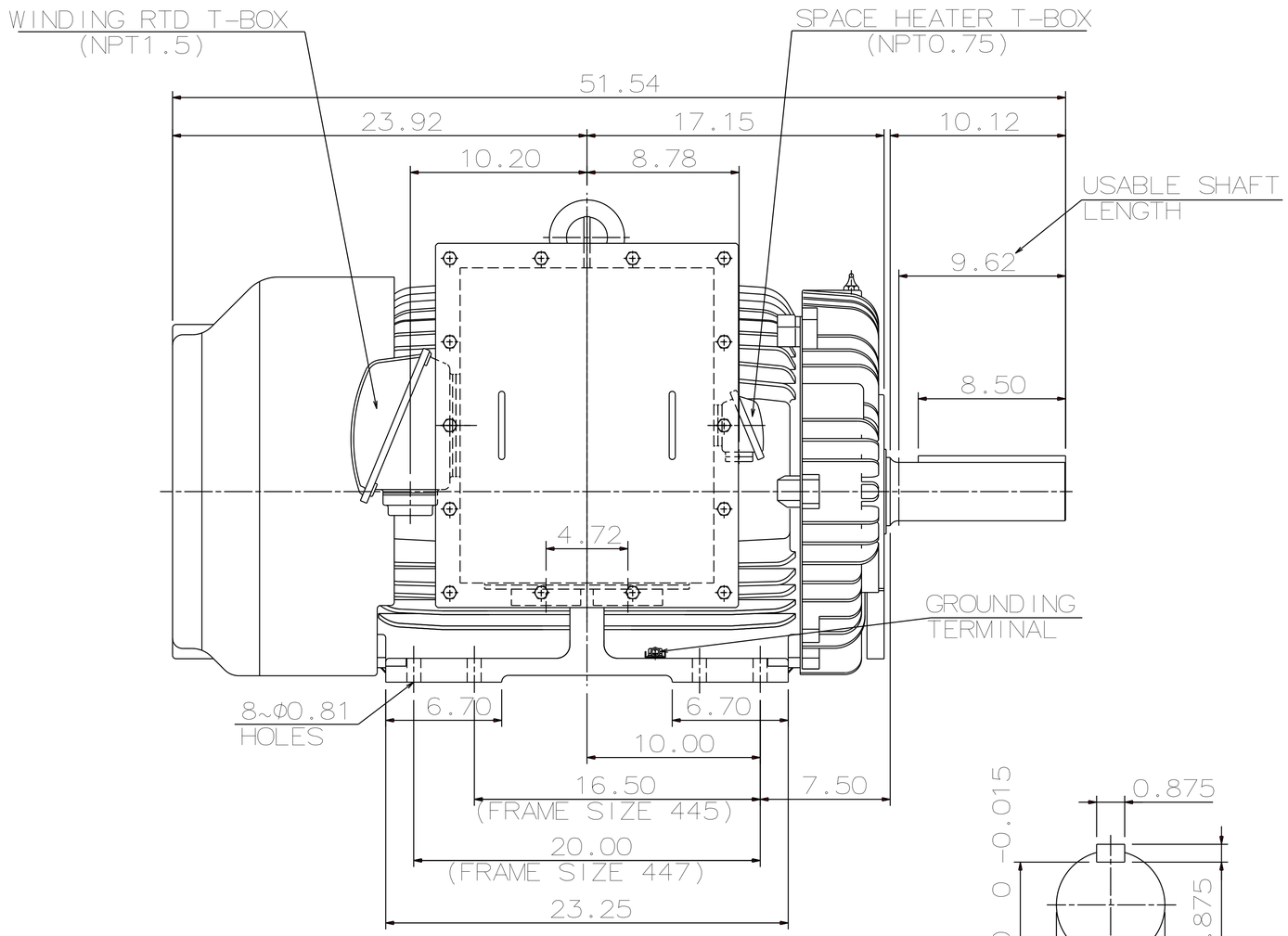

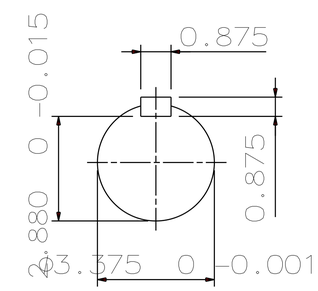

SHAFT END
ENLARGED VIEW

NOTE:
1. DIMENSIONS IN inch
2. FRAME NO. 447TZ
3. F CLASS INSULATION, S.F.1.15
4. FOR BELT DRIVE
5. ENCLOSURE: IP55
6. BEARING SIZE: DRIVE-END NU320C3
   OPP. DRIVE-END 6316
7. WITH WINDING RTD: PT 100Ω/0℃ 6PCS
8. WITH SPACE HEATER: SINGLE PHASE,120V
9. NON-SPARKING FAN
10. CORROSION PROOF
11. APPROXIMATE WEIGHT: 2,175 LBS

DWN.	J.CHANG	MAY•21•2015
CHKD.	H.HUANG	MAY•21•2015
APPD.	C.LIU	MAY•21•2015

DATE DEC 08 2016

KD1006R

OUTLINE DIMENSIONS

3-PHASE INDUCTION MOTOR

TECO Westinghouse

DWG NO. 4B040M515

REV: 00